World Academy of Science, Engineering and Technology
International Journal of Aerospace and Mechanical Engineering
Vol:7, No:1, 2013

Terrain Evaluation Method for Hexapod Robot

Tomas Luneckas, and Dainius Udris

***Abstract*—**In this paper a simple terrain evaluation method for hexapod robot is introduced. This method is based on feet coordinate evaluation when all are on the ground. Depending on the feet coordinate differences the local terrain evaluation is possible. Terrain evaluation is necessary for right gait selection and/or body position correction. For terrain roughness evaluation three planes are plotted: two of them as definition points use opposite feet coordinates, third coincides with the robot body plane. The leaning angle of body plane is evaluated measuring gravity force using three-axis accelerometer. Terrain roughness evaluation method is based on angle estimation between normal vectors of these planes. Aim of this work is to present a simple method for embedded robot controller, allowing to find the best further movement settings.

***Keywords*—**Hexapod robot, pose estimation, terrain evaluation, terrain roughness.

Digital Open Science Index, Aerospace and Mechanical Engineering Vol:7, No:1, 2013 waset.org/Publication/14839

I. Introduction

ROBOTS are very useful for environment exploration, and mobility over highly broken and unstable terrain requires legged machines [1]. For walking machines, mostly two legged (biped), four legged (quadruped), and six legged (hexapod) constructions are used. The hexapod is the most stable of the named machines, because at least three legs have a contact with surface every moment [2]. Its static stability ensures that it is stable at any movement state and does not require additional equipment to maintain stability. On the other hand, six legs require a lot of synchronization to achieve smooth movement over irregular terrain, and different motion modes – gaits – should be used for different surface.

There are many different ways for environment exploration, characterization and identification, needed for control decision making. Visual analysis using camera or various scanners has a very good perspective, but it needs a lot of computational power. Alternative way to evaluate surroundings is tactile perception.

Aim of this work is to present a simple method for embedded robot controller, allowing to find the best further movement settings by evaluating robot feet coordinates.

II. Robot Description and Coordinate System Assignment

Hexapod robot is made of rectangular body plate with length L_1 and width L_2 (Fig. 1). There are six identical legs joined to the body. Robot body pose is described by its body displacement along x, y, z axes and rotation by angles α, β, γ correspondingly around x, y, z axes of robot's coordinate frame. Each leg has three servomotors (Fig. 2). For robot to take a specific pose it actually has to change its each leg's motor angles into a needed position. So robots body displacement and rotation must be transformed into leg's motor angles.

Each foot has a surface contact sensor. Every leg movement trajectory is precalculated, but, because of unknown terrain, is stopped when it reaches surface. At this point feet coordinates can be calculated from motor angles using forward kinematics.

Foot coordinate descriptions are as follows:

x_{RF}, y_{RF}, z_{RF} –right first foot coordinates;
x_{RM}, y_{RM}, z_{RM} –right middle foot coordinates;
x_{RH}, y_{RH}, z_{RH} –right hind foot coordinates;
x_{LF}, y_{LF}, z_{LF} –left first foot coordinates;
x_{LM}, y_{LM}, z_{LM} –left middle foot coordinates;
x_{LH}, y_{LH}, z_{LH} –left hind foot coordinates.

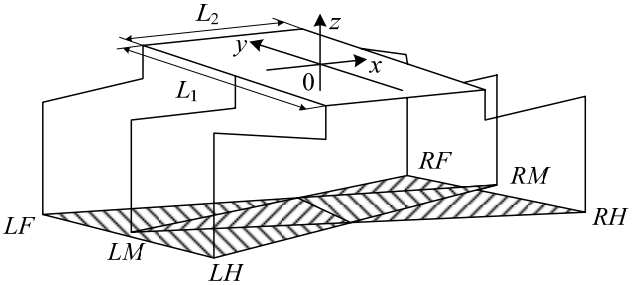

Fig. 1 Hexapod robot feet kinematic layout

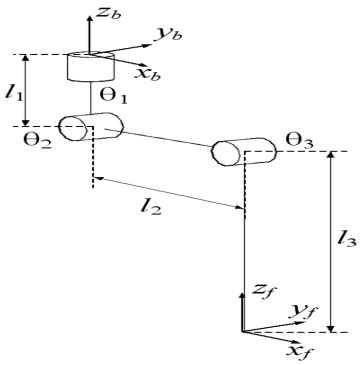

Fig. 2 Leg's kinematic layout

According to the leg's kinematic layout (Fig. 2), the foot position in general can be calculated using formulas (1)–(3), derived using Denavit-Hartenberg method for a single foot [3]:

T. Luneckas is with the Vilnius Gediminas Technical University, faculty of Electronics, Lithuania (e-mail: tomas.luneckas@vgtu.lt; phone: +370 675 22545).

D. Udris is with the Vilnius Gediminas Technical University, faculty of Electronics, Lithuania (e-mail: dainius.udris@vgtu.lt; phone: +370 5 274 4769).

Digital Open Science Index, Aerospace and Mechanical Engineering Vol:7, No:1, 2013 waset.org/Publication/14839

$$x_f = x_b + \cos\theta_1 \cos\theta_2 l_3 \cos\theta_3 - \cos\theta_1 \sin\theta_2 l_3 \sin\theta_3 + \\ + \sin\theta_1 l_2 \cos\theta_2; \quad (1)$$

$$y_f = y_b + \sin\theta_1 \cos\theta_2 l_3 \cos\theta_3 - \sin\theta_1 \sin\theta_2 l_3 \sin\theta_3 + \\ + \sin\theta_1 l_2 \cos\theta_2; \quad (2)$$

$$z_f = z_b - \sin\theta_2 l_3 \cos\theta_3 - \cos\theta_2 l_3 \sin\theta_3 - l_2 \sin\theta_2 - l_1; \quad (3)$$

where x_b, y_b and z_b are coordinates of leg's connection points to the body. These coordinates can be calculated using body kinematics expressions:

$$x_b = \cos\beta \cos\gamma \cdot a_l - \cos\beta \sin\gamma \cdot b_l + \sin\beta \cdot c_l; \quad (4)$$

$$y_b = (\cos\alpha \sin\gamma + \cos\gamma \sin\alpha \sin\beta) \cdot a_l + (\cos\alpha \cos\gamma - \\ - \sin\alpha \sin\beta \sin\gamma) \cdot b_l - \cos\beta \sin\alpha \cdot c_l; \quad (5)$$

$$z_b = (\sin\alpha \sin\gamma - \cos\alpha \cos\gamma \sin\beta) \cdot a_l + (\cos\gamma \sin\alpha + \\ + \cos\alpha \sin\beta \sin\gamma) \cdot b_l + \cos\alpha \cos\beta \cdot c_l. \quad (6)$$

Value of body plane rotation angles α and β are calculated by equation (7) from three-axis accelerometer data a_0, b_0, c_0, obtained measuring gravity force during short movement pauses:

$$\alpha = \operatorname{atan}\frac{b_0}{c_0}, \ \beta = \operatorname{atan}\frac{a_0}{c_0}. \quad (7)$$

The angle γ can only be calculated from previous control actions. If there is no special need to make rotations around z axis, value of angle γ can be taken as 0. If prerequisite to keep the body centre at the origin of coordinate frame is made, displacements of legs' basis for rectangular body can be easily calculated:

for RF $a_l = \frac{L_2}{2}$, $b_l = \frac{L_1}{2}$, $c_l = z_0$;

for RM $a_l = \frac{L_2}{2}$, $b_l = 0$, $c_l = z_0$;

for RH $a_l = \frac{L_2}{2}$, $b_l = -\frac{L_1}{2}$, $c_l = z_0$;

for LF $a_l = -\frac{L_2}{2}$, $b_l = \frac{L_1}{2}$, $c_l = z_0$;

for LM $a_l = -\frac{L_2}{2}$, $b_l = 0$, $c_l = z_0$;

for LH $a_l = -\frac{L_2}{2}$, $b_l = -\frac{L_1}{2}$, $c_l = z_0$;

where z_0 is body plate displacement along z axis.

III. Description of Terrain Evaluation Method

When foot coordinates are known, many different methods can be used for terrain roughness evaluation. Quite effective is root mean square (RMS) calculation of foot z coordinate variation [4, 5, 6]. It allows quantifiable roughness evaluation, but there are no information about surface inclination, so not enough data for body angular position correction or dangerous rapid slope detection.

To obtain possibility to evaluate terrain inclination, decision to use two corresponding planes was made. For each plane definition three points are necessary, so two separate planes can be defined using six foot coordinates. To avoid linear position, for each plane first and last legs on one side and middle leg in opposite side were selected, i. e. LF, LH, RM for one, and RF, RH, LM for other.

Using three feet coordinates, the first plane can be defined by equation (8):

$$\begin{cases} a_1 x_{LF} + b_1 y_{LF} + c_1 z_{LF} + d_1 = 0; \\ a_1 x_{LH} + b_1 y_{LH} + c_1 z_{LH} + d_1 = 0; \\ a_1 x_{RM} + b_1 y_{RM} + c_1 z_{RM} + d_1 = 0; \end{cases} \quad (8)$$

where

$$a_1 = \frac{-d_1}{D_1} \begin{vmatrix} 1 & y_{LF} & z_{LF} \\ 1 & y_{LH} & z_{LH} \\ 1 & y_{RM} & z_{RM} \end{vmatrix};$$

$$b_1 = \frac{-d_1}{D_1} \begin{vmatrix} x_{LF} & 1 & z_{LF} \\ x_{LH} & 1 & z_{LH} \\ x_{RM} & 1 & z_{RM} \end{vmatrix};$$

$$c_1 = \frac{-d_1}{D_1} \begin{vmatrix} x_{LF} & y_{LF} & 1 \\ x_{LH} & y_{LH} & 1 \\ x_{RM} & y_{RM} & 1 \end{vmatrix};$$

$$D_1 = \begin{vmatrix} x_{LF} & y_{LF} & z_{LF} \\ x_{LH} & y_{LH} & z_{LH} \\ x_{RM} & y_{RM} & z_{RM} \end{vmatrix}.$$

Analogical solution is possible for second plane (9):

$$\begin{cases} a_2 x_{RF} + b_2 y_{RF} + c_2 z_{RF} + d_2 = 0; \\ a_2 x_{RH} + b_2 y_{RH} + c_2 z_{RH} + d_2 = 0; \\ a_2 x_{LM} + b_2 y_{LM} + c_2 z_{LM} + d_2 = 0; \end{cases} \quad (9)$$

where

$$a_2 = \frac{-d_2}{D_2} \begin{vmatrix} 1 & y_{RF} & z_{RF} \\ 1 & y_{RH} & z_{RH} \\ 1 & y_{LM} & z_{LM} \end{vmatrix};$$

$$b_2 = \frac{-d_2}{D_2} \begin{vmatrix} x_{RF} & 1 & z_{RF} \\ x_{RH} & 1 & z_{RH} \\ x_{LM} & 1 & z_{LM} \end{vmatrix};$$

$$c_2 = \frac{-d_2}{D_2}\begin{vmatrix} x_{RF} & y_{RF} & 1 \\ x_{RH} & y_{RH} & 1 \\ x_{LM} & y_{LM} & 1 \end{vmatrix};$$

$$D_2 = \begin{vmatrix} x_{RF} & y_{RF} & z_{RF} \\ x_{RH} & y_{RH} & z_{RH} \\ x_{LM} & y_{LM} & z_{LM} \end{vmatrix}.$$

When all necessary parameters for equations (8) and (9) are calculated, both planes can be described in the usual form (10):

$$f(a,b,c) = ax + by + cz + d = 0\,, \tag{10}$$

and normal vectors can be described as (11):

$$\mathbf{N}_1 = \begin{bmatrix} a_1 \\ b_1 \\ c_1 \end{bmatrix},\ \mathbf{N}_2 = \begin{bmatrix} a_2 \\ b_2 \\ c_2 \end{bmatrix}. \tag{11}$$

Declination angle from horizontal position can be calculated for both planes. Declination angle around x axis for first plane α_1 and for the second plane α_2 can be calculated using equations (12), declination angle around y axis for first plane β_1 and for the second plane β_2 – using equations (13):

$$\alpha_1 = \operatorname{atan}\frac{b_1}{c_1},\ \alpha_2 = \operatorname{atan}\frac{b_2}{c_2}; \tag{12}$$

$$\beta_1 = \operatorname{atan}\frac{a_1}{c_1},\ \beta_2 = \operatorname{atan}\frac{a_2}{c_2}. \tag{13}$$

Calculated declination angles together with vertical feet coordinate displacement, characterized by coefficients c_1 and c_2, can be used for quantitative evaluation of terrain roughness. Mentioned RMS method can be used in this case. Also the additional information about surrounding environment can be obtained – surface inclination can be detected and evaluated.

IV. The Modeling Results

The imitational model was created using MATLAB for presented terrain evaluation method verification. All dimensions were taken equal to the designed physical model:

L_1 = 160 mm; L_2 = 90 mm;
l_1 = 80 mm; l_2 = 105 mm; l_3 = 68 mm.

As initial data only z coordinates for every foot were altered: *RF*, *RH* and *LM* were lifted 10 mm, *LF* and *LH* – lowered 50 mm, and *RM* – lifted 50 mm (figures show robot from the backside). For better visualization both mentioned planes and straights, collinear to normal vectors, are defined. As expected, obtained values are adequate to the definitions:

$\alpha_1 = \alpha_2 = \beta_1 = 0$; $c_1 = 10$ mm; $c_2 = -10$ mm; $\beta_2 = -21.8°$.

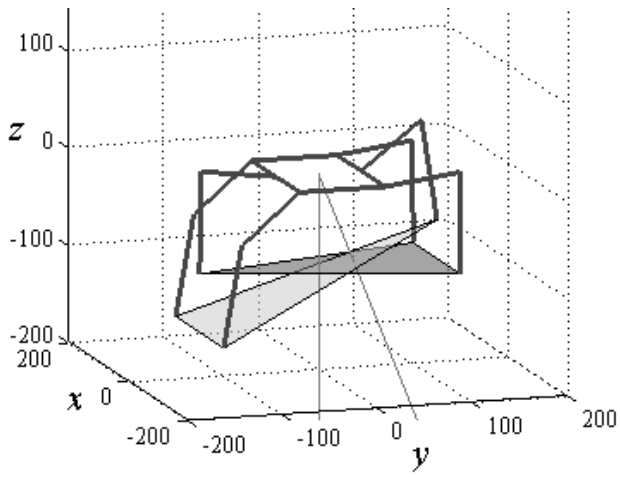

Fig. 3 Hexapod robot modeling results with fixed body plane

In Fig. 3 it is easy to notice, that defined terrain roughness is close to critical, when robot will not reach the surface regarding to dimensional and motional limits, so to keep body plane horizontal (if not defined by task) is not reasonable. The easiest way to define new body position is to turn it by angle, equal to the average of both additional planes declination angles: body plane rotation angle around x axis $\alpha_0 = (\alpha_1 + \alpha_2)/2$, and around y axis – $\beta_0 = (\beta_1 + \beta_2)/2$.

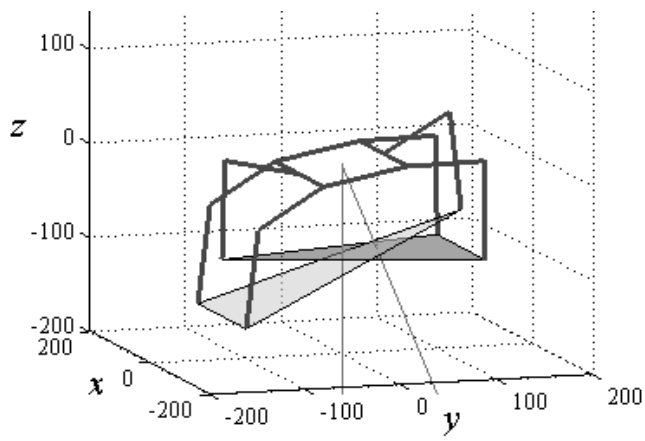

Fig. 4 Hexapod robot modeling results with adjusted angle of body plane

Result of modeling is presented in Fig. 4, and robot obviously has bigger reserve for motion because all leg's angles are closer to neutral position.

When hexapod robot walks on surface with high lateral declination and low roughness, it is very important not only to make a movement, but avoid sideslip (Fig. 5, *RF*, *RM* and *RH* feet are lifted 100 mm, *LF*, *LM* and *LH* feet are lowered 61 mm, $\beta_1 = \beta_2 = -32.8°$). Limit of lateral declination angle is reached in this case – left side legs are fully extended, and

Digital Open Science Index, Aerospace and Mechanical Engineering Vol:7, No:1, 2013 waset.org/Publication/14839

body is close to the surface at the right side.

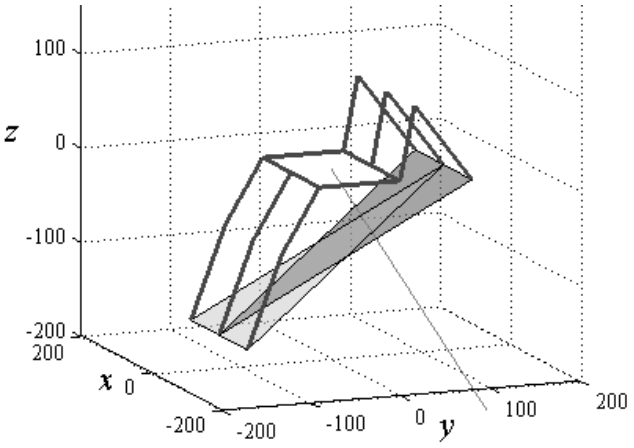

Fig. 5 Hexapod robot modeling results with high lateral declination and fixed angle of body plane

Body angular adjustment (Fig. 6) not only extends motion possibilities (all joints obtain movement freedom), but keeps contact with surface angles suitable to avoid sideslip. It shows the advantage of presented body plane position adjustment method for terrain with high lateral declination. Similar results are obtained with other surface declination directions.

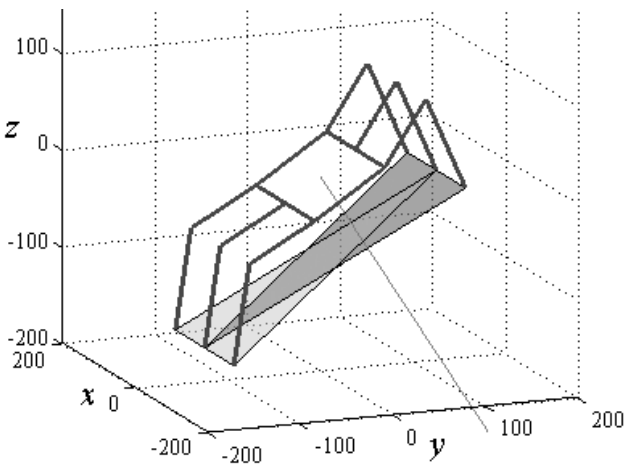

Fig. 6 Hexapod robot modeling results with high lateral declination and adjusted angle of body plane

For method testing at high terrain roughness the next set of feet displacements is presented: *RF* and *LH* are lifted 80 mm, *LF* and *RH* – lowered 20 mm, *RM* – lifted 30 mm, *LM* – lowered 30 mm (Fig. 7). Resulting feet plane declination angles are high: $\alpha_1 = -32°$, $\alpha_2 = 32°$, $\beta_1 = -13.5°$; $\beta_2 = 0$, $c_1 = 9.5$ mm, $c_2 = -9.5$ mm. After adjustment body plane angles are $\alpha_0 = 0$ and $\beta_0 = -6.75°$ – suitable for this situation, so this method works at high roughness too.

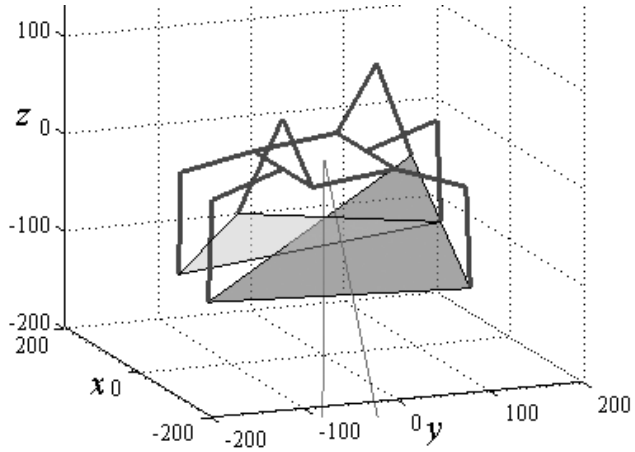

Fig. 7 Hexapod robot modeling results with high terrain roughness and adjusted angle of body plane

V. Conclusion

The presented simple terrain roughness evaluation method can be implemented into embedded hexapod robot controller and allows detect surface declination and make body plane angular position correction for better performance.

The further work is to find the best quantitative characterization of obtained angular and displacement values for robot control – optimal gait selection and trajectory corrections.

References

[1] U. Saranli, M. Buehler, D. E. Koditschek. "Design, Modeling and Preliminary Control of a Compliant Hexapod Robot" in *Proceedings of the 2000 IEEE Conference on Robotics & Automation*, April 2000, pp. 2589–2596.

[2] E. Burkus, P. Odry. "Autonomous Hexapod Walker Robot "Szabad(ka)" in *Acta Polytechnica Hungarica* vol. 5, no. 1, pp. 69–85, 2008.

[3] T. Luneckas, D. Udris. "Optimization of Hexapod Robot Locomotion" in *Electrical and Control Technologies*, Kaunas, Technologija, 2009, pp. 40–43.

[4] M. Castelnovi, R. Arkin, T. R. Collins. "Reactive Speed Control System Based on Terrain Roughness Detection" in *Proceedings of 2005 IEEE Intl. Conference on Robotics and Automation (ICRA)*, pp. 891–896.

[5] R. Hoffman, E. Krotkov. "Terrain Roughnes Measurement from Elevation Maps" in *SPIE* vol 1195 *Mobile Robols IV*, pp. 104–114, 1989.

[6] M. K. Shepard, B. A. Campbell, M. H. Bulmer, T. G. Farr, L. R. Gaddis, J. J. Plaut. "The Roughness of Natural Terrain – A Planetary and Remote Sensing Perspective" in *Journal of Geophysical Research*, vol. 106, no. E12, pp. 32,777–32,795, 2001.

Digital Open Science Index, Aerospace and Mechanical Engineering Vol:7, No:1, 2013 waset.org/Publication/14839